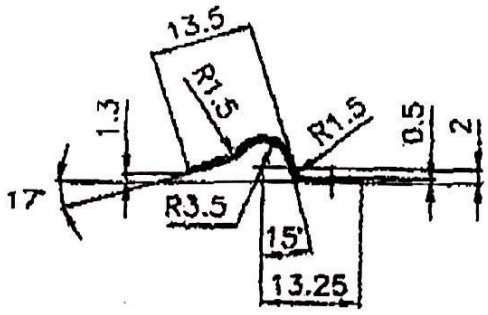

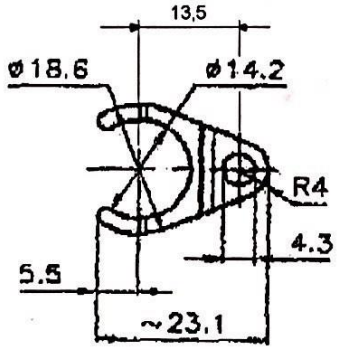

A			
Revision	Date	Signature	Description
AISI 304	Acciao Inox / Stainless Steel		
Detail	Material		
05.05.2001			
Date	Signature		

araolit
CONTROL DE TEMPERATURA

A5869

Rev.	Scale
==	==

Molla semplice per term. bim.
Single spring for bimet. therm.